DEM680E Delayed Egress Magnalock®

Configurable, 1,200 lbs holding force, bracket mounted, delayed egress Magnalock

Highly configurable, strong, easy-to-mount. The latest in delayed egress technology.

Building on the technology of the Securitron EcoMag Series, the DEM680E is a direct replacement for the iMXDA. Designed for applications that require a lock that delays the opening of a door, the DEM680E standard model is HUGS-compliant with specific code compliant models also available. For use on interior and perimeter exit, single, out-swinging doors.

Grade 2 | MagnaCare Warranty | Auto Sensing Dual Voltage 12/24 | Fire Rated

Features

Standard Features

- Autosensing dual voltage with microprocessor technology – no field adjustment required
- Patented BondSTAT magnetic bond sensor and integrated Door Position Switch (DPS)
- Instant release circuit – no residual magnetism
- Easily visible LEDs indicate status on secure side of door
- Fully integrated delay and detection features for fast installation of delayed egress system
- Auto calibrated door movement detection up to 1/4" [6.35mm]
- Alarm strobe indicates countdown; stays illuminated post alarm until reset
- Size optimized to work with door closers
- External alarm relay isolated dry contact (1 A at 24 VDC)
- Configurable settings include:
  - » Nuisance delay times 0, 1, 2, or 3 seconds
  - » Irrevocable alarm times 15 or 30 seconds
  - » Bypass delay times 0, 15, 30, 45 seconds
  - » No irrevocable alarm after bypass expiration
  - » Post alarm reminder
  - » Bypass expiration alarm
  - » Manual/delayed relock
  - » Unlocked at startup
- Required sign included
- MagnaCare® lifetime replacement, no-fault, no questions asked warranty

Optional Features

- 8 architectural finishes
- DEM680E-CA15S California-required 15s exit delay
- DEM680E-CA30S California-required 30s exit delay
- DEM680E-CH Chicago-required 15s exit delay, 1s nuisance delay, and 0s bypass time

Accessories

- Securitron mortise key switch and cylinder included in box – supports electric lock control, alarm panel arming, reset and override
- **ASB-680** Aluminum Shim Bracket in Clear or Black Anodized
- **CWB-680** Concrete Wood Bracket in Clear or Black Anodized
- **GDHB-680** Glass Door Header Bracket in Clear or Black Anodized

For easy 3D instructions, download the BILT mobile app

Specifications

Certifications

- UL 294 Listed
- UL 10C Fire Rated 1 hour
- CSFM – California State Fire Marshal approved (DEM680E-CA only)
- CAN/ULC S104 Fire Door Conformant
- NFPA 101

Electrical

- **Minimum Current**
  - » 95 mA (± 10%) at 12 VDC
  - » 65 mA (± 10%) at 24 VDC
- **Maximum Current**
  - » 575 mA (± 10%) at 12 VDC
  - » 315 mA (± 10%) at 24 VDC

Holding Force

- 1,200 lbs [544kg] static strength

Operating Temperature

- 32˚ to 120˚F [0˚ to 49˚C]
- Indoor use only

Shipping Weight

- 13.1 lbs [5.9 kg]

Dimensions

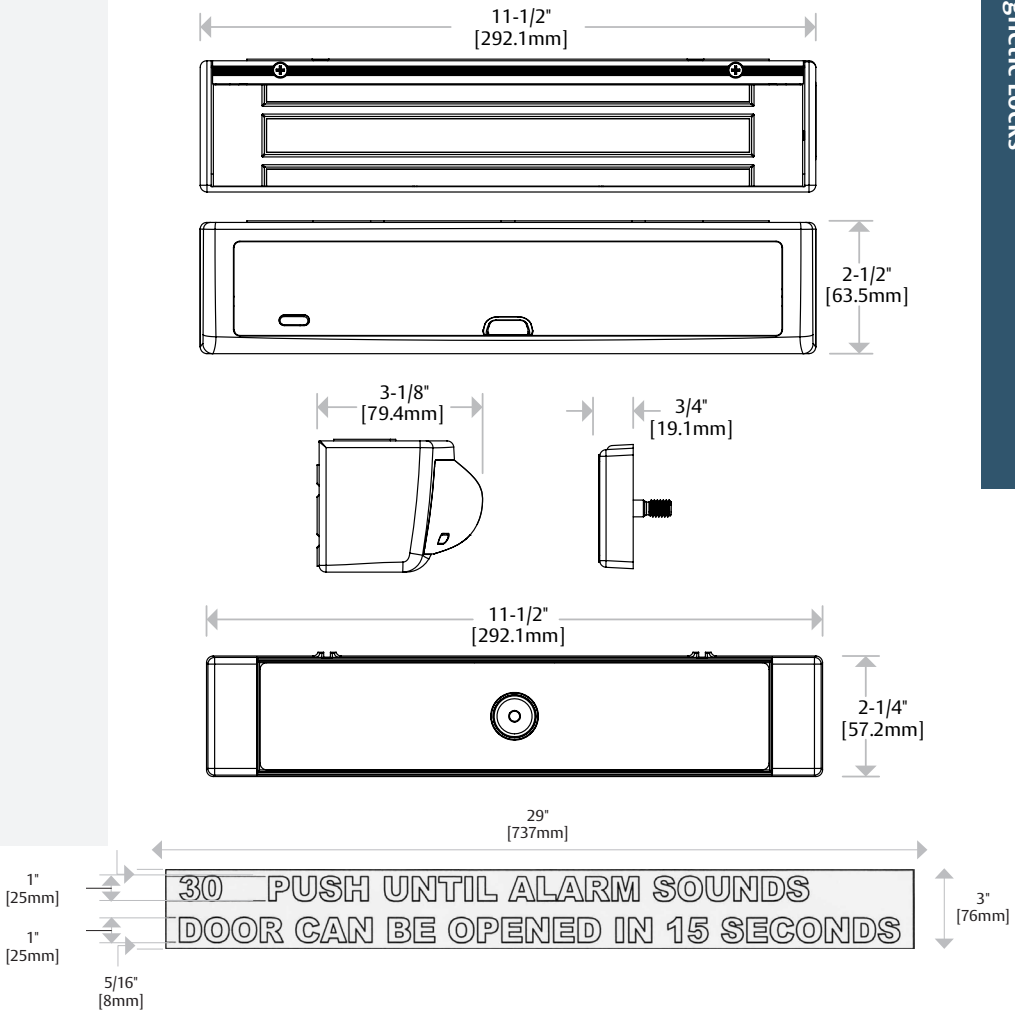

Related Accessories

ASB-680 | CWB-680 | GDHB-680

Ordered Separately

How to Order

MODEL SERIES	TIMING OPTIONS	FINISH OPTIONS
DEM680E		– 606
Delayed Egress M680 EcoMag	**(blank)** Standard Model (Supports HUGS)	**628** Satin Aluminum Clear
		605 Bright Brass
	-CA15S California 15 Second Compliant	**606** Satin Brass
		612 Satin Bronze
	-CA30S California 30 Second Compliant	**613E** Dark Oxidized Satin Bronze
		629 Bright Stainless Steel
	-CH Chicago Compliant	**630** Satin Stainless Steel
		BSP Black Suede Powder

Updated 8/24/23 Printed in the U.S.A. Patent pending and/or patent www.assaabloydss.com/patents

Copyright © 2023, Hanchett Entry Systems, Inc., an ASSA ABLOY Group company. All rights reserved. Reproduction in whole or in part without the express written permission of Hanchett Entry Systems, Inc. is prohibited.